96W 24V LED CCT Dimmer and Driver

Model : LW-DD-24096-CCT

HUEDA LED
www.huedaled.com

24V DC | 96W | c UL us LISTED | FC | SMOOTH DIMMABLE CCT | 3 Years Limited Manufacturer Warranty



FEATURES

- Constant Voltage Output
- 120VAC AC input
- Built in active PFC function
- Easy installation
- cULus listed
- Suitable for LED lighting and sign lighting applications
- Short circuit, overload and over temperature protection
- Dimmer with on/off switch
- 3 way switch compatibility
- Suitable for dry and damp indoor locations

SPECIFICATIONS

Output	DC Voltage	24V
	Voltage	±0.5V Tolerance
	Load Regulation	<=1%
	Line Regulation	<=0.5%
	Rated Current	4.00A
	Rated Power	96W
Input	Voltage Range	120VAC
	Frequency Range	60Hz
	Power Factor @ Full load	0.99
	Efficiency @ Full load	90%
	AC Current	0.9A
	Inrush Current	50A, 150us @ 50% Ipeak
	Leakage Current	< 0.5mA
	THD @ Full load	<= 10%
Protection	Short Circuit	Hiccup mode, recovers automatically after loading situation
	Over Temperature	Shell surface temperature 100°C±10°C shut down o/p voltage, auto recover after cooling
	Over Loading	>=110% Hiccup mode, recovers automatically after loading situation
Environment	Working Temp.	-40°C ~ 60°C (-40°F ~ 140°F)
	Working Humidity	20~95 % RH, non-condensing
	Storage Temp. Humidity	-40°C ~ 80°C, 95 % RH non-condensing
	Temp. Coefficient	±0.03% / °C (0°~50°C)
	Vibration	10~500Hz, 2G 12min/1 cycle, period for 72min each along X, Y, Z axes
Safety&EMC	Safety standards	UL8750 CAN/CSA-C22.2 NO.250.13
	Withstand voltage	I/P-O/P:1.8KVAC I/P-F/G:1.8KVAC O/P-F/G:0.5KVAC
	Isolation Resistance	I/P-O/P:100MΩ / 500VDC / 25°C / 70% RH
	EMC EMISSION	FCC Part15 Subpart B ANSI C63.4:2014
	EMC IMMUNITY	FCC/ICES do not request this test
Other	Net. Weight	0.25Kg (0.55lbs)
	Size	105L x 54W x 51H mm (4.13" x 2.12" x 1.99")

HUEDA LED | #130 10615 48 ST SE | CALGARY, AB T2C 2B7 | CANADA | Version 1.0 05/06/26

Copyright © 2026 HUEDA LED. A division of LED WORLD INC. All Rights Reserved. Product and specifications subject to change without notice. Registered trademarks are owned by their respective registers, or licensee(s).

96W 24V LED CCT Dimmer and Driver

Model : LW-DD-24096-CCT

HUEDA LED
www.huedaled.com

PRODUCT DIMENSION

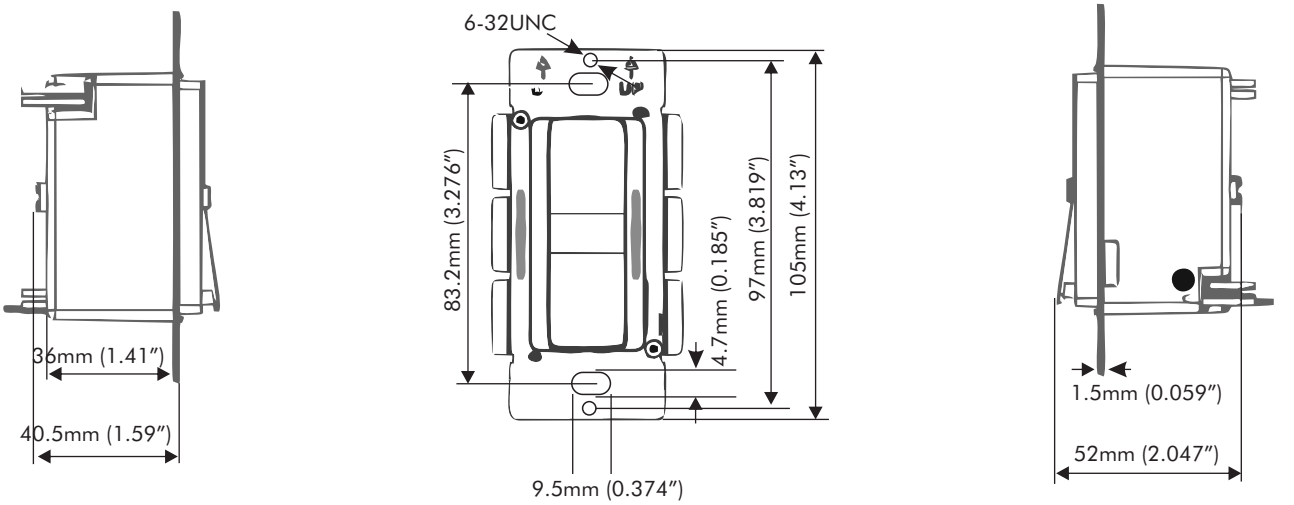

EFFICIENCY CURVE (EFFICIENCY VS OUTPUT LOAD)

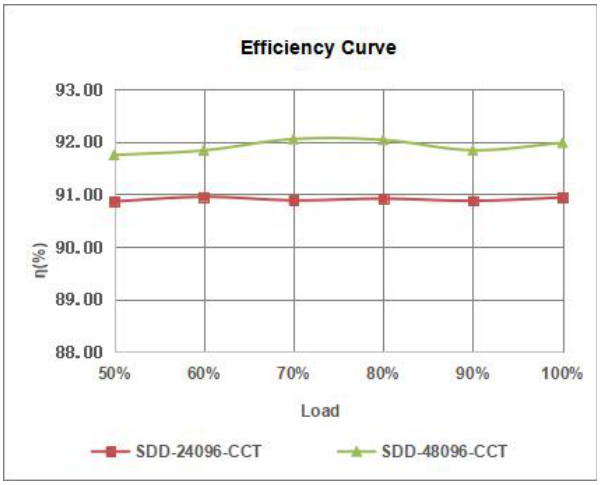

POWER FACTOR CURVE

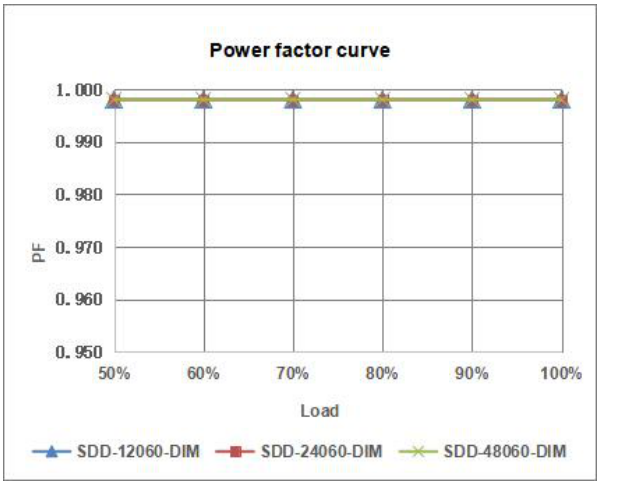

EFFICIENCY CURVE (EFFICIENCY VS OUTPUT LOAD)

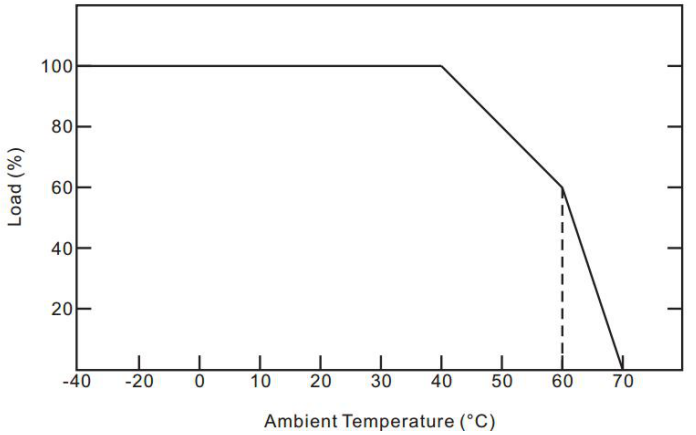

WARNING

Check polarity. Risk of Electric Shock. Indoor use only. Suitable for dry and damp indoor locations. Risk of Fire. Installation involves special wiring methods to run wiring through a building structure. Consult a qualified electrician. Risk of Electric Shock.

HUEDA LED | #130 10615 48 ST SE | CALGARY, AB T2C 2B7 | CANADA | Version 1.0 05/06/26

Copyright © 2026 HUEDA LED. A division of LED WORLD INC. All Rights Reserved. Product and specifications subject to change without notice. Registered trademarks are owned by their respective registers, or licensee(s).